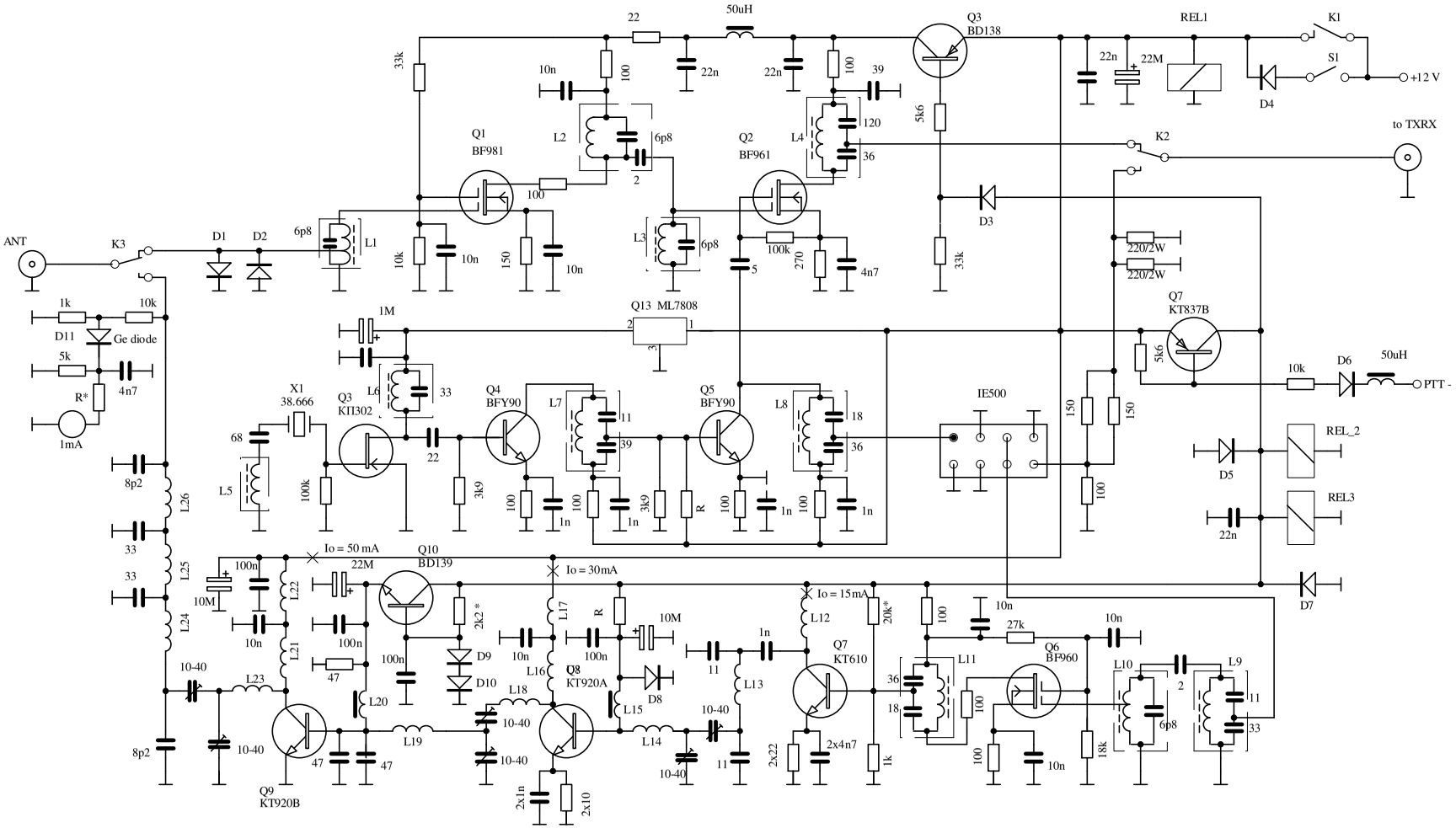

TRANSVERTER for 144MHz

LZ2ZK