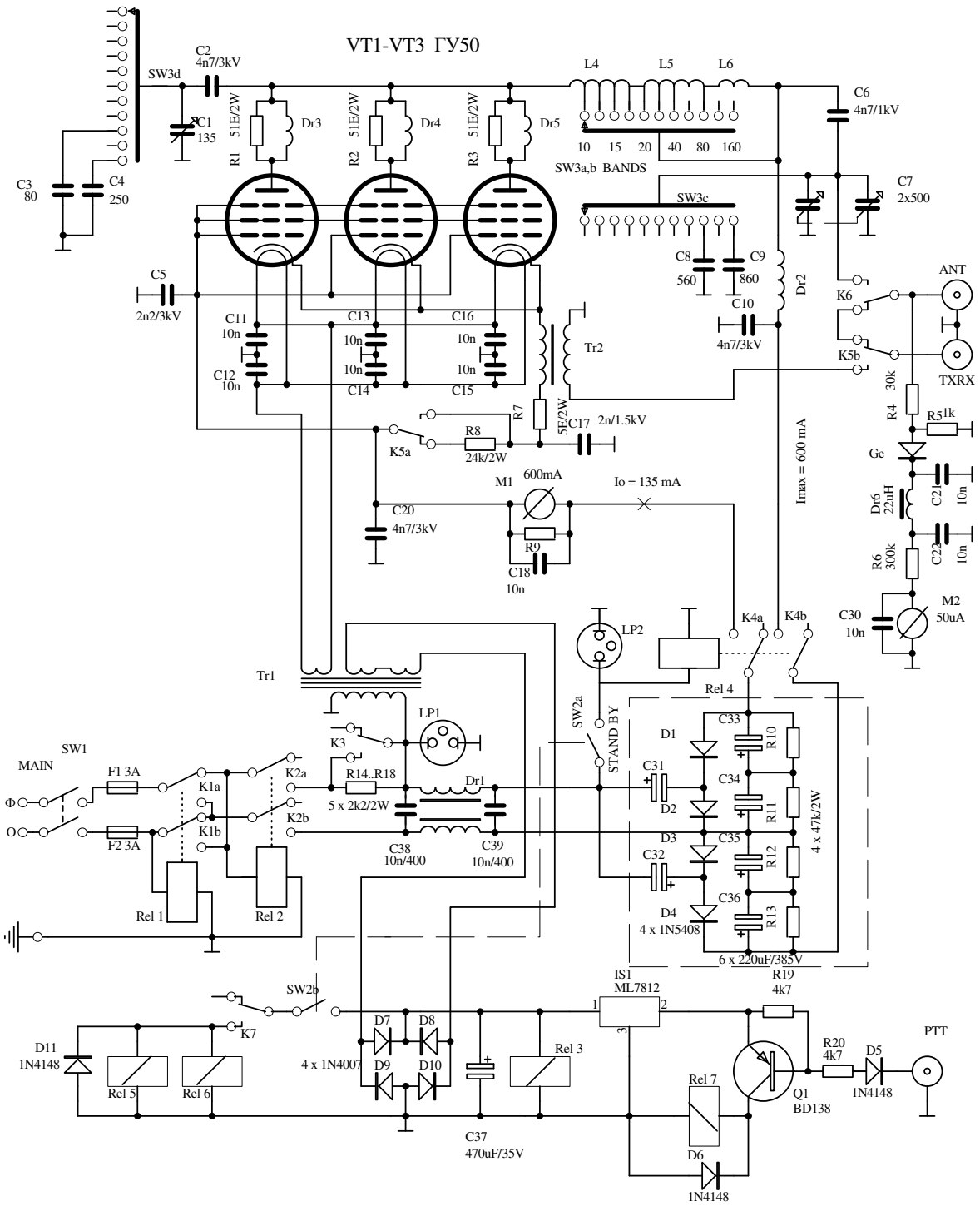
VT1-VT3 ГУ50
SW3d
C2
4n7/3kV
C1
135
R1
51E/2W
Dr3
R2
51E/2W
Dr4
R3
51E/2W
Dr5
L4
L5
L6
10
15
20
40
80
160
SW3a,b BANDS
C6
4n7/1kV
C7
2x500
C3
80
C4
250
SW3c
C8
560
C9
860
Dr2
C10
4n7/3kV
C5
2n2/3kV
C11
10n
C12
10n
C13
10n
C14
10n
C16
10n
C15
10n
Tr2
K6
K5b
ANT
TXRX
R4
30k
R5
1k
Ge
Dr6
22uH
C21
10n
R6
300k
C22
10n
M2
50uA
C30
10n
R7
5E/2W
C17
2n/1.5kV
K5a
R8
24k/2W
M1
600mA
Io = 135 mA
Imax = 600 mA
C20
4n7/3kV
R9
C18
10n
LP2
K4a
K4b
Tr1
LP1
SW2a
STAND BY
Rel 4
K3
SW1
MAIN
F1 3A
F2 3A
K1a
K1b
K2a
K2b
R14..R18
5 x 2k2/2W
Dr1
C38
10n/400
C39
10n/400
D1
D2
D3
D4
4 x 1N5408
C31
C32
C33
C34
C35
C36
R10
R11
R12
R13
4 x 47k/2W
6 x 220uF/385V
Rel 1
Rel 2
SW2b
IS1
ML7812
R19
4k7
K7
D11
1N4148
Rel 5
Rel 6
D7
D8
D9
D10
4 x 1N4007
Rel 3
C37
470uF/35V
Rel 7
D6
1N4148
Q1
BD138
R20
4k7
D5
1N4148
PTT

Фиг. 1