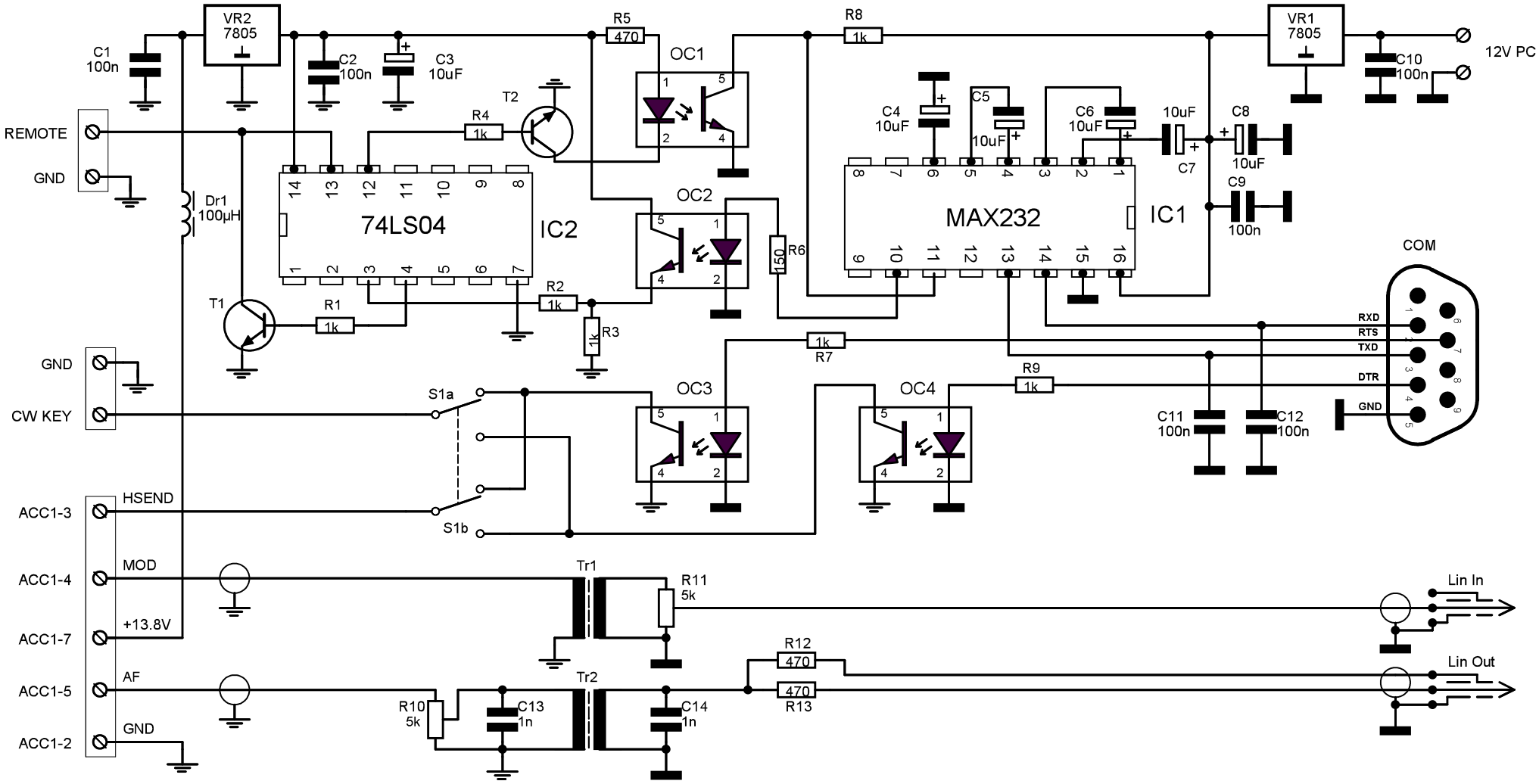
VR2
7805
C1
100n
C2
100n
C3
10uF
R5
470
OC1
R8
1k
VR1
7805
C10
100n
12V PC
REMOTE
GND
R4
1k
T2
C4
10uF
C5
10uF
C6
10uF
10uF
C7
C8
10uF
C9
100n
Dr1
100µH
74LS04
IC2
OC2
R6
150
MAX232
IC1
COM
RXD
RTS
TXD
DTR
GND
T1
R1
1k
R2
1k
R3
1k
R7
1k
R9
1k
GND
CW KEY
S1a
S1b
OC3
OC4
C11
100n
C12
100n
ACC1-3
HSEND
ACC1-4
MOD
ACC1-7
+13.8V
ACC1-5
AF
ACC1-2
GND
Tr1
R11
5k
Lin In
R12
470
R13
470
Lin Out
Tr2
R10
5k
C13
1n
C14
1n